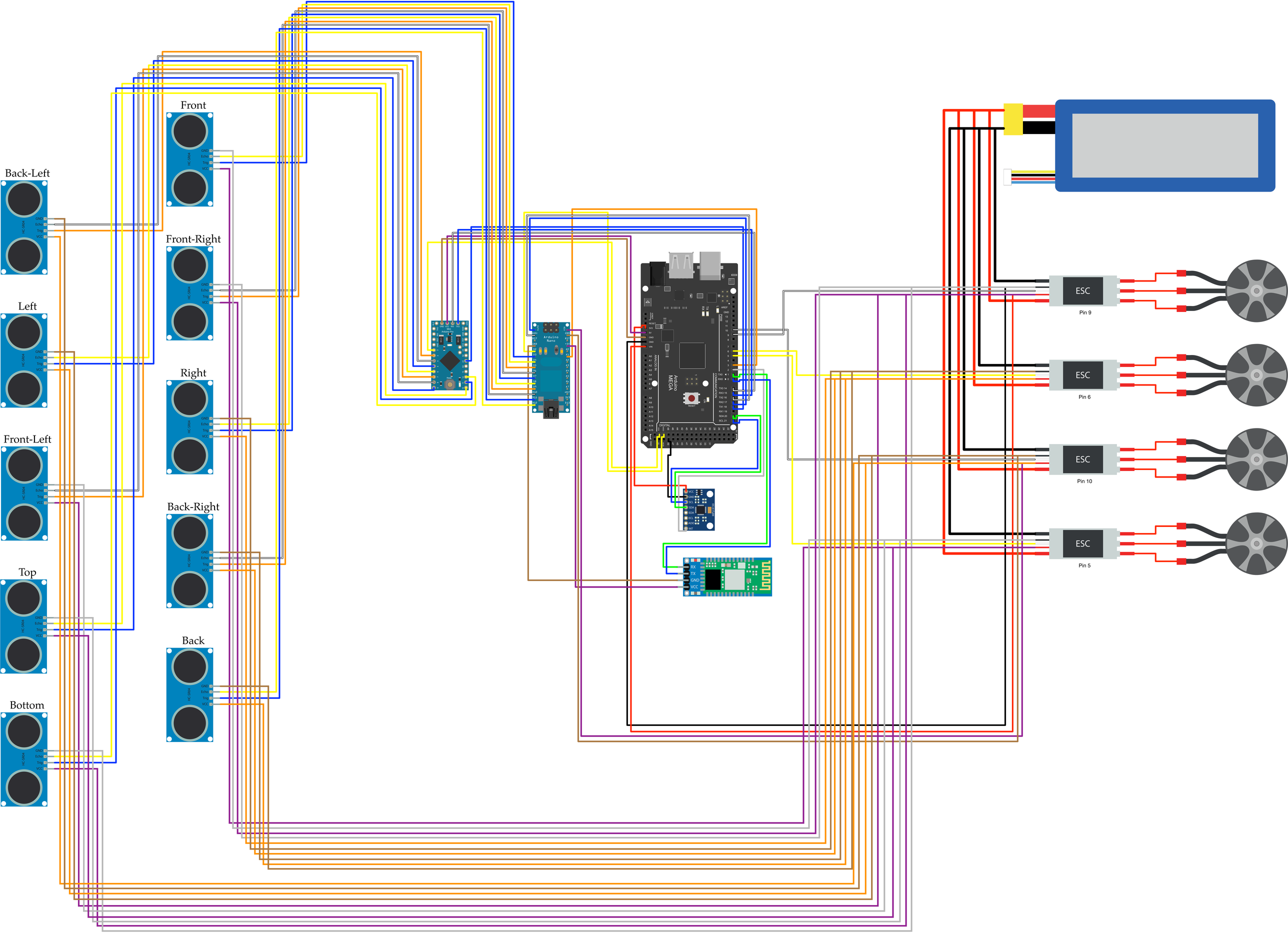
Front
Back-Left
Front-Right
Left
Right
Front-Left
Back-Right
Top
Back
Bottom
HC-SR04
GND
Echo
Trig
VCC
Arduino Nano
Arduino MEGA
ESC
Pin 9
ESC
Pin 6
ESC
Pin 10
ESC
Pin 5
MPU6050
VCC
GND
SCL
SDA
XDA
XCL
ADO
INT
RX
TX
GND
VCC