KIELER Pragmatics Release 2015/06

KIELER Pragmatics 2015/06

- Official Project Website
- Built on Eclipse 4.4 "Luna"

We are happy to provide release 2015/06 of the **KIELER Pragmatics Project**! KIELER Pragmatics is a framework for enhanced user interaction in graphical modeling that builds on the Eclipse platform. This document describes how to install the release and highlights the most exciting new features.

As the usual bonus, we are co-releasing our KLighD-based **KIELER Ptolemy Browser**.

- Installation
- Release Notes and Highlights
  - New Features
  - Important Fixed Bugs
- Quickstart
  - Diagram Layout
  - Viewing Ptolemy Models
- Known Problems and Limitations
- Bug Reports, Comments

Installation

KIELER Pragmatics 2015/06 is provided as a set of features, available to be added to your Eclipse installation via an update site. KIELER Pragmatics 2015/06 was tested on Eclipse 4.4 "Luna", but may also be compatible with other versions of Eclipse.

- See the KIELER Downloads site for download details.
- KIELER Pragmatics requires an installed Java Runtime Environment >= version 1.6.
- The layout components of KIELER can make use of the layout algorithms provided by the Graphviz library. You may want to install that.

Also refer to the KIELER Downloads page to download the KIELER Ptolemy Browser and the KIELER Web Service.

Release Notes and Highlights

For this release, we have solved almost 80 tickets. You can find a list of them at our issue tracking system. Release notes of older releases can be found at our Release Notes page.

New Features

Here's a few highlights of what's new in this version:

- KIELER Layout Algorithms
  - KLay Layered has seen substantial performance improvements, especially in its BK Node Placement algorithm.
  - KLay Layered's BK Node Placement algorithm has furthermore seen large improvements in the number of edges drawn straight. To use it set the `Properties.COMPACTION_STRATEGY` to `IMPROVE_STRAIGHTNESS`.

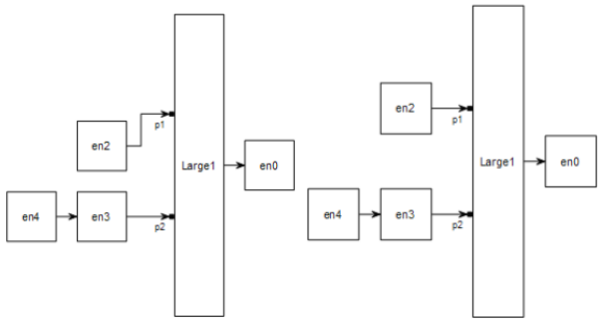

  - We have added a heuristic that improves the number of edge crossings to KLay Layered. The heuristic is active by default and should thus immediately improve your diagrams. Customize the heuristic through its layout option, `Properties.GREEDY_SWITCH_TYPE`.

Important Fixed Bugs

Among others, the following bugs were fixed in this version:

- KIELER KGraph Text
  - Fixed a bug that caused `ConcurrentModificationException`s to be thrown around all the time while editing the document.

Quickstart

Diagram Layout

One of the core features of KIELER Pragmatics is the KIELER Infrastructure for Meta-Layout (KIML). It provides the glue between diagram editors and layout algorithms. If you have installed layout support for GMF editors, you may want to try the following:

- Open a diagram using a GMF editor.
- Press the Layout button in the toolbar:
- Open the *Layout View* by clicking *Window -> Show View -> Other...* and choosing *Layout* from the *KIELER Layout* category.
- Change some of the values and press the Layout button again.

Viewing Ptolemy Models

If you have a Ptolemy installation, try the following:

- Save a Ptolemy model as a `.moml` file somewhere.
- Download and start our *Ptolemy Model Browser*.
- Open your moml file.
- Double-click actors that have further models inside them. Also double-click modal model states that have refinements. Use the sidebar on the right to influence how your model is displayed.

Known Problems and Limitations

- Starting with Mac OS X Mountain Lion, trying to start our software may give you an error message similar to this:

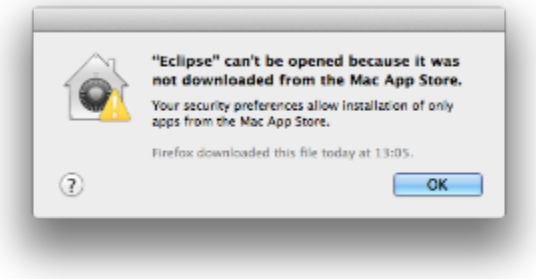

  The solution is to open your system preferences and navigate to the *Security & Privacy* settings. Therein, either click on *Open Anyway* if available or change *Allow apps downloaded from* to *Anywhere*.

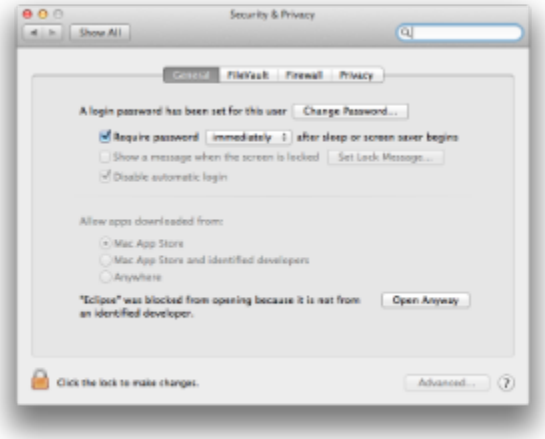

Starting our software will now result in the following message:

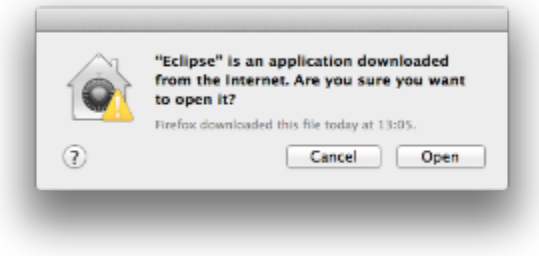

Simply click *Open* and you're good to go.

- Upon starting the Ptolemy Model Browser, you may get something like this:

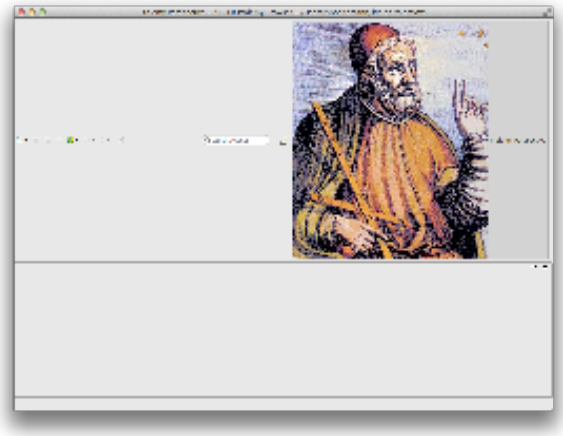

The solution is to exit the application, remove your existing workspace, and restart the Ptolemy Model Browser. Your workspace can be found in your home folder and is called `kielerPtolemyWs`.

- The Ptolemy Model Browser can properly display only a limited set of actors. Other actors may look a lot different than they do in Ptolemy.
- Currently there is no full-blown user documentation integrated. See our KIELER Project for more information.

Bug Reports, Comments

We're working hard to make the graphical modeling user experience as convenient as possible. However, bugs can still remain in the code and some things might not be as you would expect them. Please don't hesitate to send in bug reports or give other comments like feature requests.

Send bug reports to kieler@…, please. For news or general questions subscribe to the rt-kieler mailing list.